SANIPEXGROUP

TECHNICAL DATASHEET

M-LINE WALL MOUNTED SOAP DISH AND HOLDER CP

BDA-MLI-602-A-CP

10 YEAR GUARANTEE

Specifications

Brand	BAGNODESIGN
Range	M-LINE
Product code	BDA-MLI-602-A-CP
Finish/Colour	CHROME
Product type	SOAP DISH
Material	GLASS/BRASS

Technical Information

SOAP DISH AND HOLDER
WALL MOUNTED
PLATED BRASS HOLDER
GLASS DISH
SINGLE FIXING POINT

Lifestyle Image

Drawing

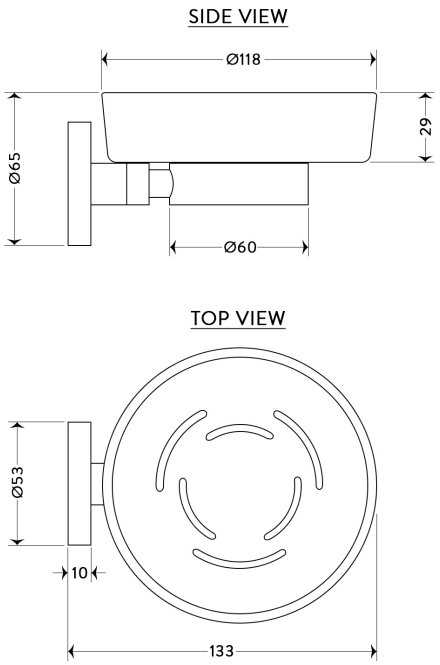

Box contents: BRASS HOLDER, GLASS DISH, FIXING KIT, INSTALLATION GUIDE