SANIPEXGROUP

TECHNICAL DATASHEET

MONROE COUNTERTOP 910 CARBONE

BDF-MNR-090-CB

Specifications

Brand	BAGNODESIGN
Range	MONROE
Product code	BDF-MNR-090-CB
Finish/Colour	CARBONE
Product type	COUNTERTOP/ SHELF
Material	WOOD

Technical Information

COUNTERTOP SHELF IN WOOD
WALL MOUNTED
NO TAP HOLES
NO WASTE HOLE
REQUIRED FIXING BRACKET BDF-HAR-340-MTL

Drawing

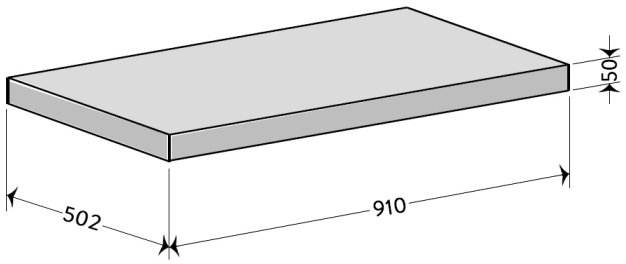

Box contents: COUNTERTOP SHELF

SANIPEXGROUP

TECHNICAL DATASHEET

MONROE WALL MOUNTED VANITY UNIT 900 PLATINUM

BDF-MNR-V090-PL

2 YEAR GUARANTEE

Specifications

Brand	BAGNODESIGN
Range	MONROE
Product code	BDF-MNR-V090-PL
Finish/Colour	PLATINUM
Product type	VANITY UNIT
Material	WOOD

Technical Information

VANITY UNIT
WALL MOUNTED
1 PUSH TO OPEN DRAWER
WITH CUT-OUT FOR BOTTLE TRAP
SUPPLIED RIGID (NOT FLAT PACKED)

Lifestyle Image

Drawing

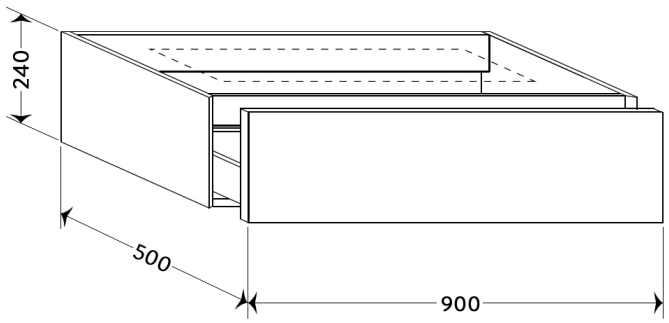

Box contents: VANITY UNIT, FIXING KIT