SANIPEXGROUP

TECHNICAL DATASHEET

HARLEM COUNTERTOP 2034 AMERICAN OAK

BDF-HAR-200-OAK

1 YEAR GUARANTEE

Specifications

Brand	BAGNODESIGN
Range	HARLEM
Product code	BDF-HAR-200-OAK
Finish/Colour	AMERICAN OAK
Product type	COUNTERTOP/ SHELF
Material	WOOD

Technical Information

COUNTERTOP / SHELF IN AMERICAN OAK
WALL MOUNTED
WITHOUT BRACKETS
REQUIRES BDF-HAR-340-MTL

Lifestyle Image

Drawing

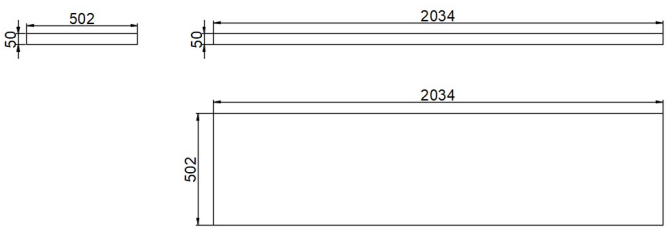

Box contents: COUNTERTOP

SANIPEXGROUP

TECHNICAL DATASHEET

COUNTERTOP SUPPORT BRACKET METAL (PAIR)

BDF-HAR-340-MTL

Specifications

Brand	BAGNODESIGN
Range	HARLEM
Product code	BDF-HAR-340-MTL
Finish/Colour	CHROME
Product type	COUNTERTOP BRACKET
Material	BRASS OTHER

Technical Information

COUNTERTOP SUPPORT BRACKET
PAIR

Drawing

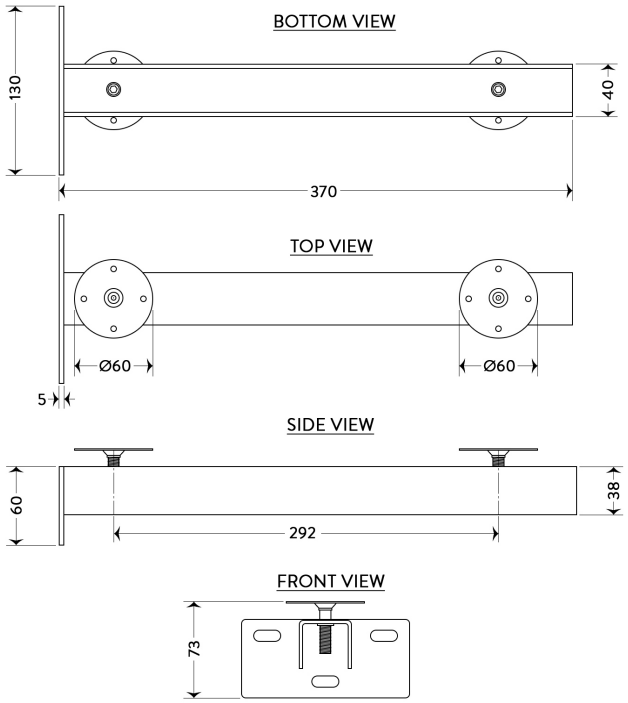

Box contents: COUNTERTOP SUPPORT BRACKET PAIR